DURAG GROUP

DURAG D-FW 410
Dust filter leak detector

Monitoring industrial filtration systems such as baghouses, cyclones, and exhaust ducts

- **Highly reliable dust filter detector:** Designed for monitoring filter leaks in real time.
- **Cost-effective and low maintenance:** Enables long-term dust trend detection for predictive maintenance, reducing servicing needs and minimizing total cost of ownership through early fault identification.
- **Triboelectric principle:** Robust and reliable technology, reducing filter maintenance intervals, process down-time, and filter costs.

DURAG
DURAG GROUP

ONE COMPANY | COMPREHENSIVE SOLUTIONS

- **Local support, global reach:** Benefit from local commissioning and services through our extensive network of partners and corporate organizations, ensuring prompt assistance and expertise wherever you are.
- **One company, comprehensive solutions:** DURAG GROUP offers a comprehensive solution for your plant, from combustion optimization and safety to environmental compliance and atmospheric impact monitoring.

FEATURES AND BENEFITS

- **Accurate detection**
  Measurement range with detection as low as 0.01 mg/m³, ideal for precise dust emission monitoring
- **Fast response to process changes**
  Provides immediate feedback on shifts in dust levels, allowing rapid intervention
- **No sample handling required**
  Direct in-duct monitoring streamlines installation and reduces maintenance
- **Low-maintenance design**
  Real-time monitoring with practically no drift ensures reliable performance and minimal upkeep
- **Long-term trend monitoring**
  Supports ongoing analysis of dust levels for efficient process control and preventive maintenance
- **Built for harsh environments**
  IP66 rating
- **Early filter leak detection**
  Rapid response to dust level changes helps prevent significant emissions, supporting compliance and avoiding product loss
- **Improved process efficiency**
  Continuous, real-time data on dust trends allows for optimized filtration cycles, improving equipment longevity and reducing downtime
- **Cost-effective maintenance**
  Early detection of filter wear or failure minimizes the need for emergency repairs, preventing costly disruptions and promoting efficient maintenance
- **Environmental responsibility + operational efficiency**
  Accurate monitoring and control of emissions help industries meet environmental standards and improve overall plant efficiency

TECHNICAL DATA

Measured parameter	Solid particles in gas flow
Measuring principle	Triboelectric, in situ measurement, single-sided installation
Measuring range	• Detection limit 0.01 mg/m³, • Max. range up to several g/m³ depending on operating conditions
Protection rating	IP66
Power supply	24 V⎓ (±10%)
Power consumption	1 W
Output signals	Active and isolated 4 ... 20 mA output, max. loop resistance 500 Ω
Communication interface	RS-485
Communication protocol	Modbus RTU

Duct connection	Weld-on process connection, 1/2 inch, NPT, L = 34 mm (1.34″)
Ambient conditions	• Temperature: –40 ... 60 °C (–40 ... 140 °F) • Humidity: Max. 95% relative humidity (non-condensing)
Process conditions	• Temperature: Max. 250 °C (482 °F) • Pressure: Max.200 kPa (29 psi) • Flow speed: Min. 3 m/s (9.84 ft/s)
Operation + configuration	Optional: D-ESI FW software
Material	• Housing: Aluminum, painted • Probe: Stainless steel (316L) • Insulation: Polyether ether ketone (PEEK)
Probe Dimensions	Length: 250 mm (9.84″), can be shortened by the user
Weight	0.7 kg (1.54 lb) without probe

D-FW 410 | DIMENSIONS, SIDE VIEW

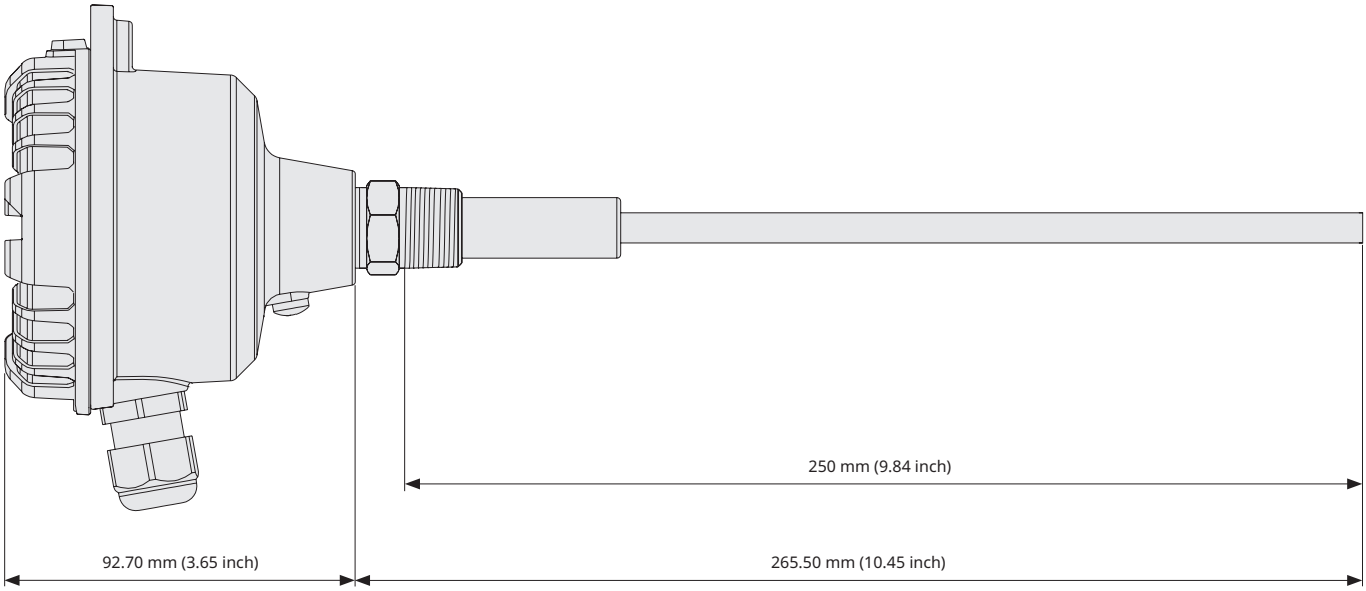

D-FW 410 | DIMENSIONS, FRONT VIEW

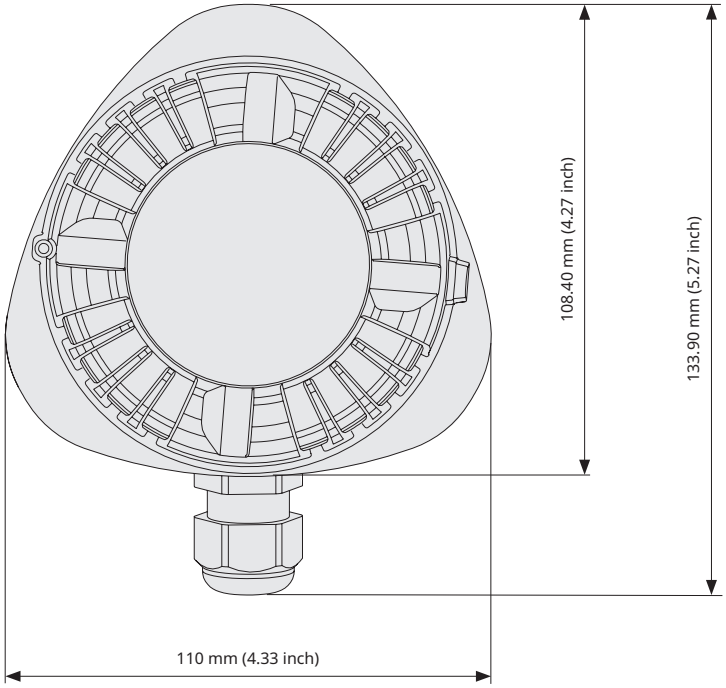

DURAG GROUP

DURAG GROUP

Kollaustr. 105
22453 Hamburg, Germany
Phone +49 40 554218-0
info@durag.com

DURAG.COM

Follow us on LinkedIn

© DURAG GROUP 09/2025 | Subject to change